SPECIFICATION:

JOSAM 24700-45 SERIES COATED CAST IRON PARAPET TYPE ROOF DRAIN, REMOVABLE SLOPING BRONZE GRATE, FLASHING CLAMP, SHALLOW SUMP WITH FLASHING FLANGE AND 45° SIDE OUTLET THREADED CONNECTION.

ROOF DRAIN

PARAPET TYPE, SLOPING GRATE

SERIES 24700-45

FORMERLY 24710 SERIES

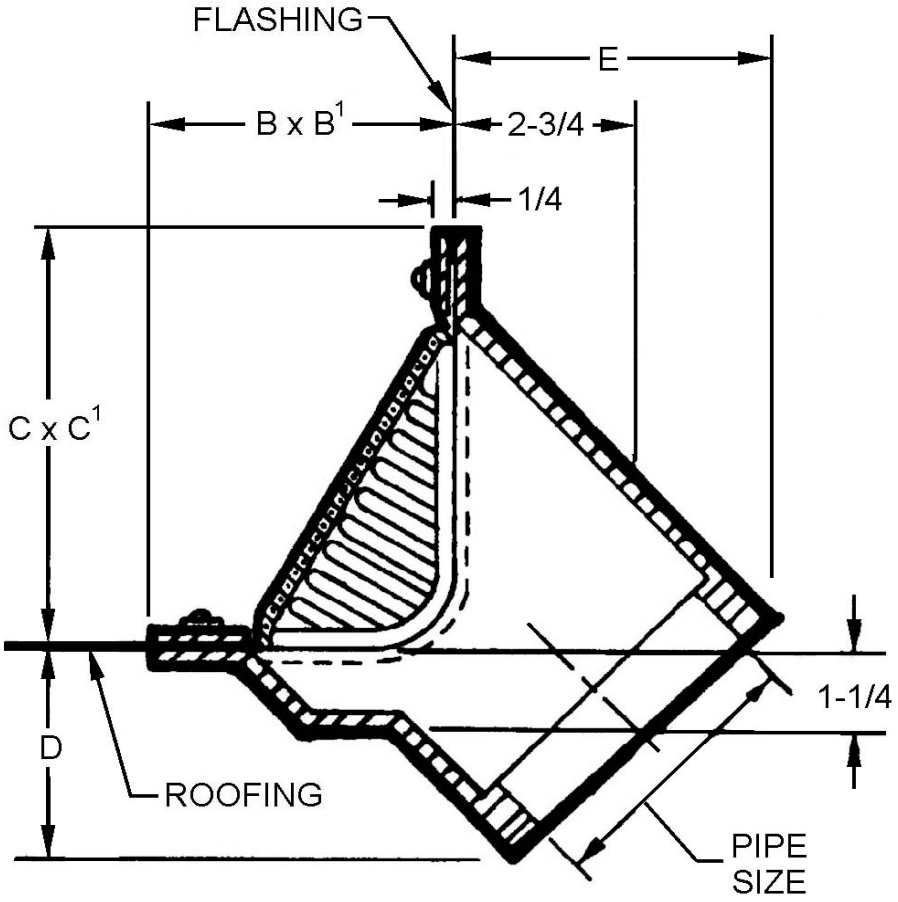

PIPE SIZE	B x B[1]	C x C[1]	D	E	GRATE FREE AREA
2”	4-1/2 x 11	6-1/2 x 11	2-1/4	3-7/8	19.5
3”	4-1/2 x 11	6-1/2 x 11	2-5/8	4-1/4	19.5
4”	4-1/2 x 11	6-1/2 x 11	3	4-5/8	19.5
5”	5-1/2 x 13	7-1/2 x 13	3-1/2	5	34.3
6”	5-1/2 x 13	7-1/2 x 13	3-5/8	5-1/2	34.3

- [x] -45 BODY WITH 45° THREADED OUTLET
- [ ] -20 GALVANIZED CAST IRON PARTS
- [ ] -22 CAST IRON GRATE
- [ ] -24 ROUGH NIKALOY GRATE
- [ ] -50 SATIN FINISH NIKALOY GRATE
- [ ] -51 SATIN FINISH BRONZE GRATE
- [ ] -61 DOWNSPOUT ELBOW (CAST IRON)
- [ ] -61-20 DOWNSPOUT ELBOW (GALVANIZED)

DRAWING No. 06/18/08

A-12622-K

JOSAM COMPANY

MICHIGAN CITY, INDIANA

NOTES: